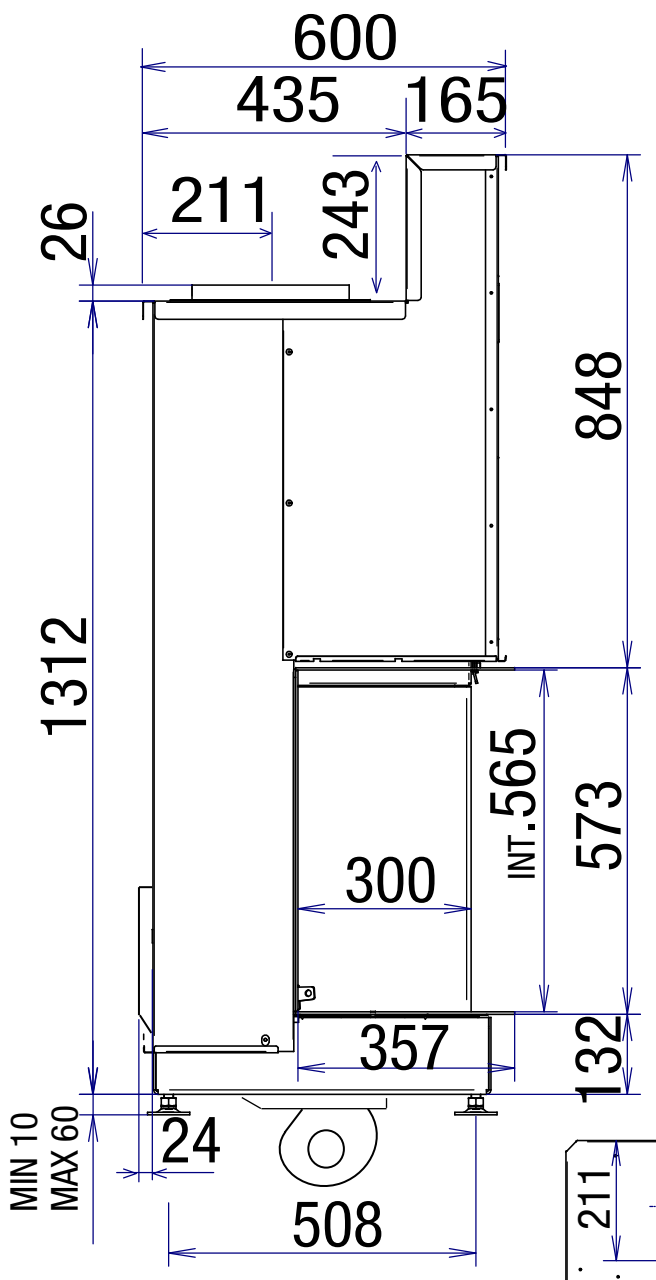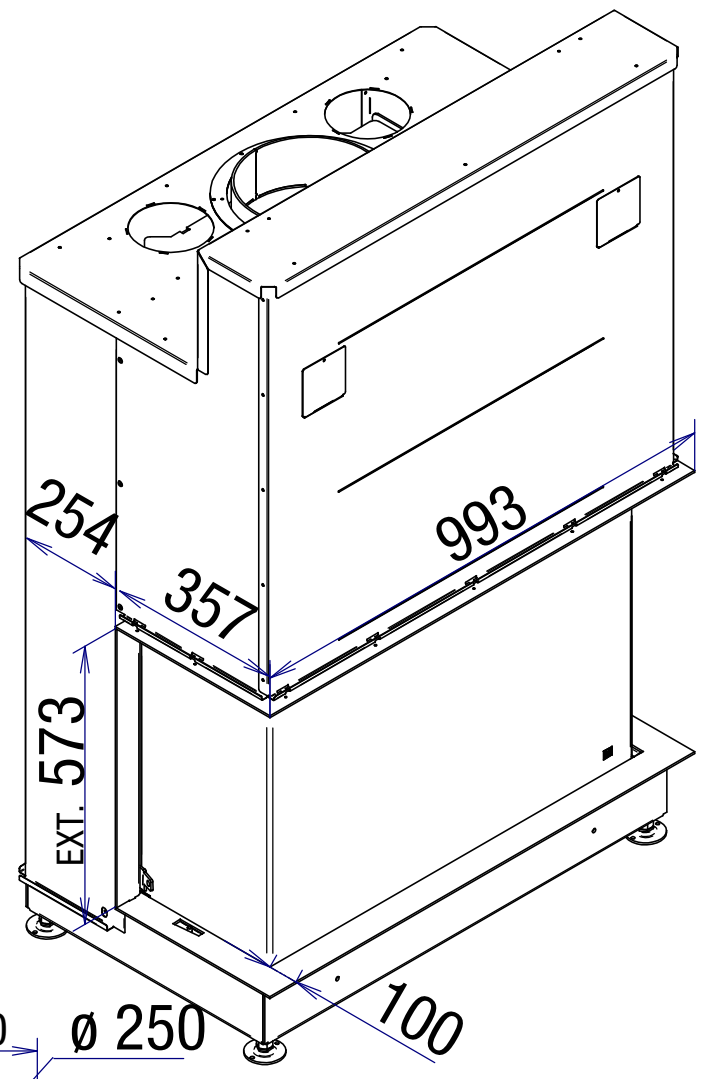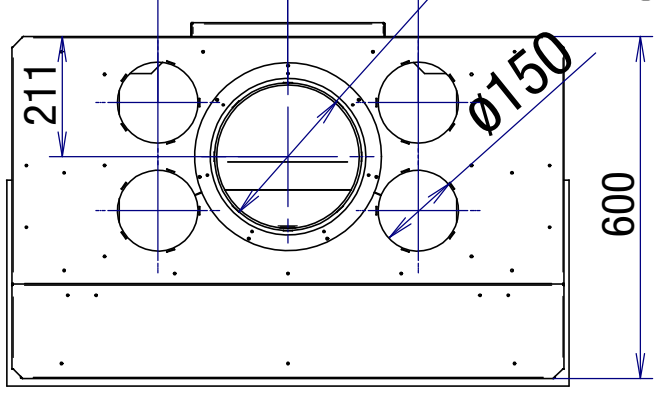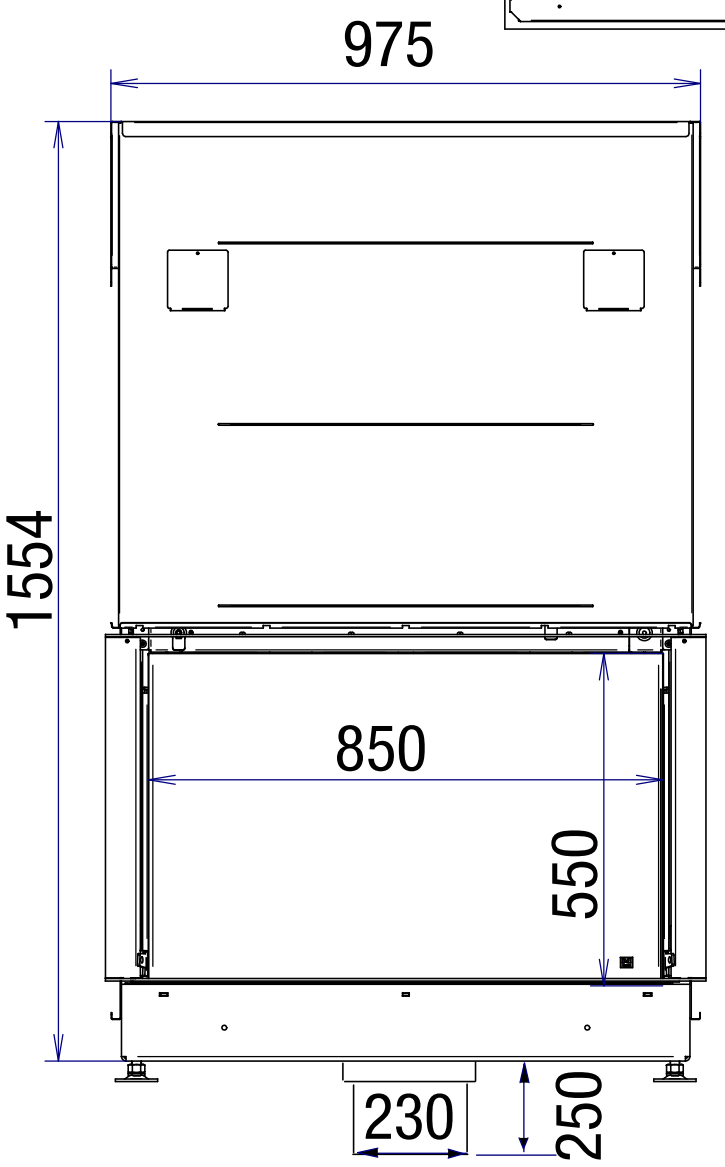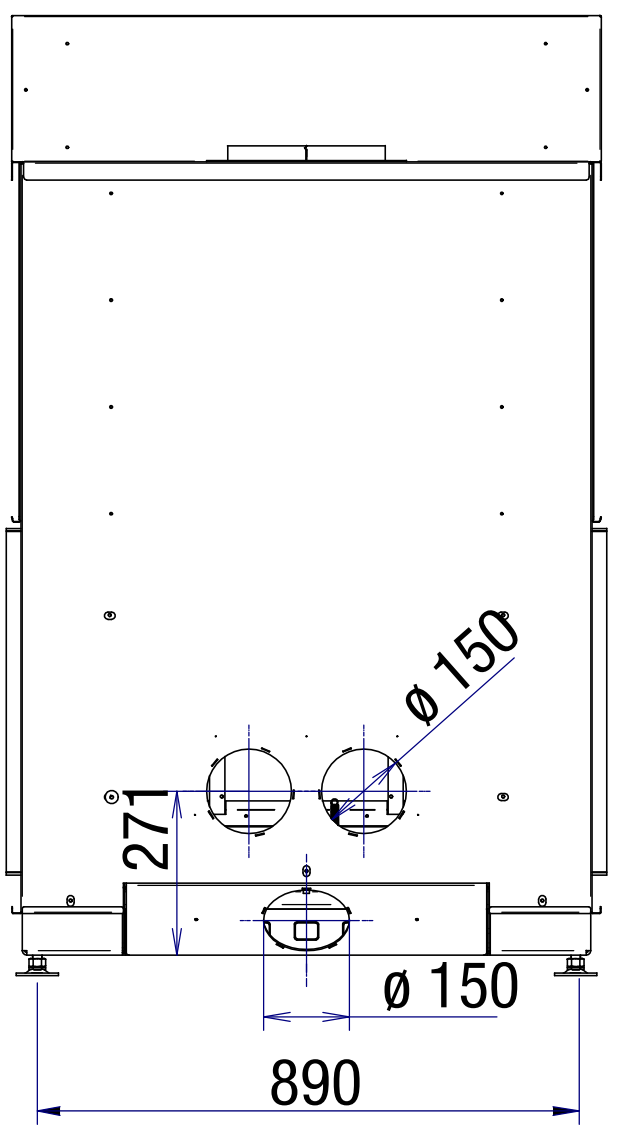LUNA DIAMOND 1000 DC