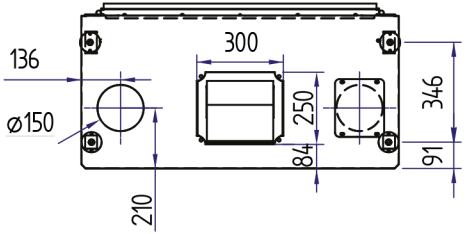

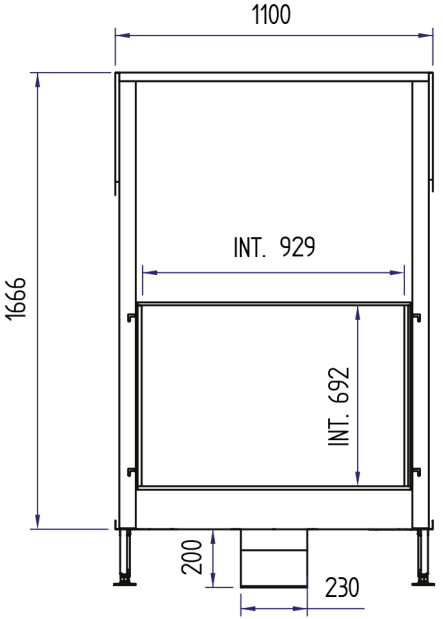

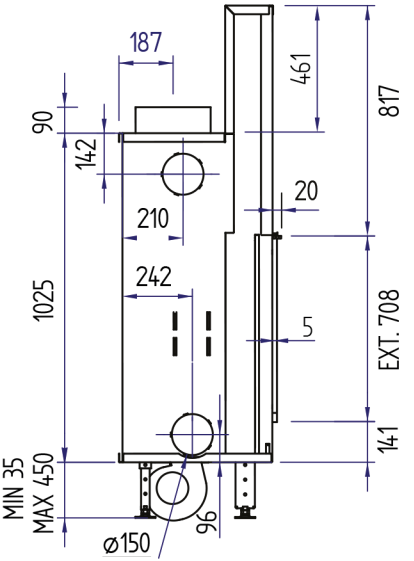

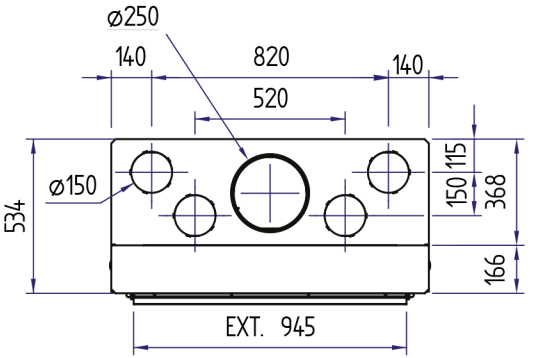

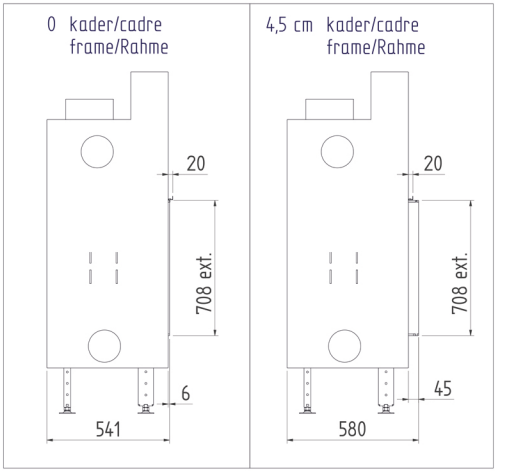

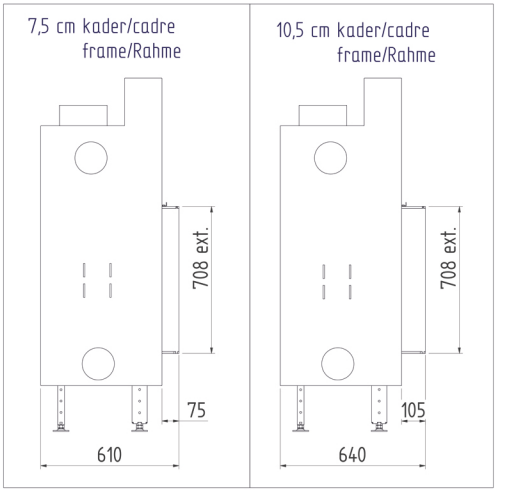

M design
PASSION FOR FIRE

Luna Diamond 1000V